RF HAMDESIGN
Microwave Equipment & Parts

Specifications sheet v1.40

SPX-05 X Y Antenna Rotator Unit
Based on Slew Drive Gearbox

Available Models:
SPX-05/XY/HR = Positions sensors **HALL Effect** = **X/Y Rotor**
SPX-05/XY/ABS = Positions sensors **Absolute Encoders** = **X/Y Rotor**

MD-01 or MD-02 controller included standard delivery

SPX-05/XY is a 2 engine X Y rotor system and supplied including:

- ✓ SPX-05 X Y rotor 0.1 degree resolution
- ✓ Included mounted counter weight plate (Optional counter weight arm CWA-01)
- ✓ MD-01 or MD-02 rotor controller
- ✓ X Y convert software to control MD-01 or MD-02 controller and rotor through PC
- ✓ USB connection for PC (Remote control through Ethernet module optional)
- ✓ Build in track interface included X Y convert software (EME, Satellite, or write own app, Protocol available)
- ✓ All connectors to connect to rotor and SPID PS-0x power supply (Connector rotor side IP-68)

SPX-05/XY/HR Rotor unit
Standard configuration
(Picture: Pedestal PLATE-08/106 is optional)

New model **SPX X Y Antenna rotators** which are available with Hall Effect or Absolute Encoder positions sensors
Both systems can be used for communication companies, broadcasting centers, meteorological stations, research institutes, Universities educational establishments, VSAT, SNG, radio relay transmissions, etc etc.

Both systems do rotate 6 degree/sec. and 0.1 degree/step resolution

SPX X/Y rotor Controlled by MD-01 / MD-02 controllers

SPID offers a new software setup in all supplied controllers to drive the **NEW SPX X/Y rotators**
Our **MD-01 or MD-02 controllers** are supplied incl this **new X/Y convert software**.

Unique X Y Rotor System in this price range:……
It is a now great possibility to operate a X/Y rotor by use of your standard AZ/EL tracking software. With the new Firmware you can control a X/Y rotor by using Azimuth and Elevation tracking software.
Connect the MD-0X controller to you PC, install you favorite track program, sent the AZ and EL data to the controller and the rotor will rotate in X/Y plane.
It is also possible to drive the controller by sending direct X/Y date to MD-0x controller to rotate the rotor in X/Y plane

New model **Slew Drive SPX-06 AZ/EL** rotators are also available and are built with the same hardware to rotate fast and accurate. Both rotor systems are available with HALL Effect sensors or Absolute encoders.

Why should you use a X Y rotor ?
For tracking slow objects (moon, sun...) it doesn't matter which rotor you use.
But for fast flying objects (LEO satellites or weather satellites) a X Y Rotator is a much better choice.
While Azimuth and Elevation rotors still keep moving in Az/EL (step motion) to track objects in a circular orbit around the earth, X Y rotors are positioned on the X axis and only the Y axis moves.
This create a smooth and fast movement. The X axis is at an angle to the orbit of the satellite and only the Y axis is tracking it.

The rotation speed of the rotor is important because, for example, LEO satellite can be visible on the horizon for only 20-30 minutes and the rotor must move as fast as possible to keep up with the satellite. That's why movement speed of 6 or more degrees per second is so important and this is what SPX-02/XY offers with this rotor system
Next advantage is, rotors which track satellites when a satellite passes over the rotor, a Azimuth / Elevation rotor has a problem to track the satellite, X Y rotors do not have this disadvantage, they easy rotate in all directions.

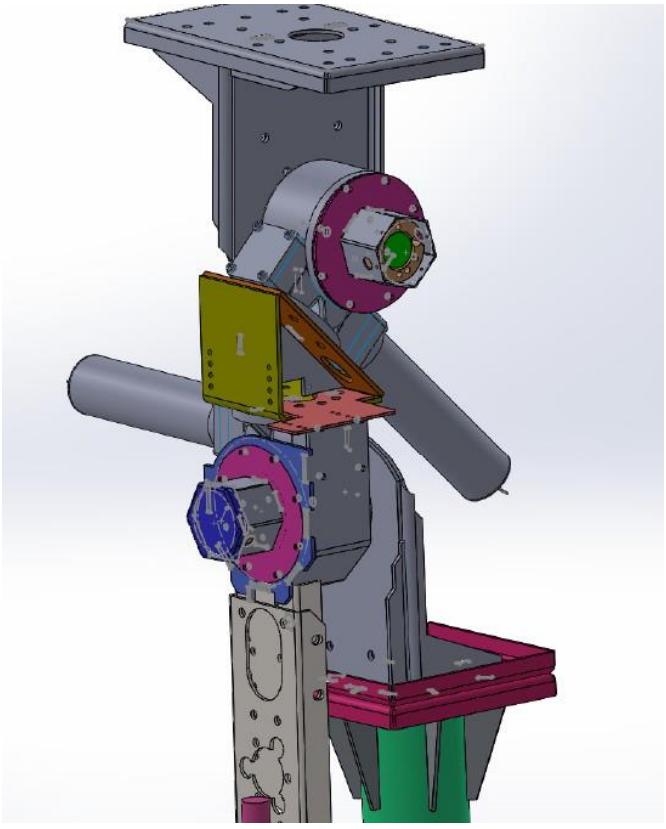

SPX-05 X/Y Slew Drive rotor system
illustrative representation

TECHNICAL DATA ROTOR SYSTEM SPX-05 X Y

X Y Rotor System: SPX-05/XY/HR and SPX-05/XY/ABS	
Motor output speed	1.0rpm / 6 degree / sec
Motor voltage	28…30 Volts DC (6dgr/sec rotation speed)
Output torque	716 Nm / 528 lbf.ft
Tilting moment	1100 Nm / 811 lbf.ft
Holding torque	2200 Nm / 1622 lbf.ft
Static Axial Rating	30 kN / 6750 lbf
Static Radial Rating	15 kN / 3375 lbf
Dynamic Axial Rating	9.6 kN / 2160 lbf
Dynamic Radial Rating	8.4 kN / 1890 lbf
Gear Ratio	62:1
Gear Mechanism	Worm Gear
Max X/Y tracking range	X 180 Degree / Y 180Degree
Usable carrying weight	60 Kg / (Exceeding 15 Kg a counter balance is needed)
Max Dish Antenna diameter	RF HAMDESIGN DISHES: 1, 1.2, 1.5, 1.9, 2.4 and 3 Meter diameter
Resolution Degree / step	0.10dgr HR sensor / 0.10dgr or better Absolute encoder sensor
Track transmitting rate	0.5 sec / each command
IP Class	IP65
Rated Current	6-10A (max 12A / motor)
Control cables	4 x 1.5mm2 (for motor supply)
Control cables HALL Sensor effect rotor	6x0.25mm2 shieled (for positions sensors)
Control cables Absolute Encoder rotor	CANbus cable 3x2x0.22mm2 shieled (for positions sensors)
Weight full setup incl mounting brackets	49.8 Kg
Capacity mounting diameter RF HAMDESIGN Mesh Dish	1 – 3 Meter diameter dish

Rotor Controller options		
	MD-01 (19" Rack mount enclosure)	**MD-02** (Desk top enclosure)
Supply voltage:	12……18 Volts & 28….30 Volts DC	12……18 Volts & 28…30 Volts DC
Current consumption:	3 …20 A (Max current depends on load)	3 …20 A (Max current depends on load)
Supplied including:	Digital controller, build in PC track interface, software, Connectors	Digital controller, build in PC track interface, software, Connectors
Dimensions:	(483x366x45mm)	(386x306x70mm)
Weight:	5 Kg	5 Kg
Housing:	Aluminium / steel	Aluminium / steel
Environment:	Ground / Mobile Sheltered	Ground / Mobile Sheltered
MTBF:	15000 hours @ -5 to +40°C	15000 hours @ -5 to +40°C
Display:	LCD 2*20 digit (green)	LCD 2*20 digit (green)
Internal resolution	0.01 degree / step	0.01 degree /step
Pulse reading frequency	Max 0.5 sec / command	Max 0.5 sec / command
Positions sensor input	HR system: Sub-D9 Absolute Encoder: Can-Bus	HR system: Sub-D9 Absolute Encoder: Can-Bus
Supplied including	Connectors for Rotor and Sensors Fast Setup info sheet (PDF) 1 year warranty and email support	Connectors for Rotor and Sensors Fast Setup info sheet (PDF) 1 year warranty and email support
Enclosure options	MD-01: 19" Rack mount enclosure MD-01 and MD-02 are electrical equal	MD-02: Desktop enclosure MD-01 and MD-02 are electrical equal
2 Axis tracking rotor system	Built in AZ & EL track interface AZ&EL data will be converted to X/Y data	Built in AZ & EL track interface AZ&EL data will be converted to X/Y data
Connection PC (WIN OS)	USB, COM, Ethernet. (Ethernet module is option)	USB, COM, Ethernet. (Ethernet module is option)

Freight charges:

We do ship daily worldwide, some countries excepted.
Shipment of this kind of rotators is on pallet transport, overseas freight can be expensive.

(Picture is ½ EURO Pallet including: SPX-05 + Pedestal + Controller + Power supply)

Introduction SPX-05/XY and controller MD-01 / MD-02

The MD-0x controller is used to control the rotation of your rotor system. MD-0x is a multifunctional device and may be connected to the SPX-X/Y rotor system and display the angles direct in degrees on the front LCD display in 0.5…..0.1 degree resolution.

This system needs a Dual Voltage output Power supply, operation voltage of this system is 12-18Volts DC & 28-30Volts DC
PS-01 or PS-02 Is a perfect solution to drive this rotor system, fits perfect to MD-01 or MD-02.

To start up this X/Y rotor you need to learn about this system.
Max rotation in both axis are 180 degrees, start point of X/Y rotor is difference as AZ/EL rotors.
Start up manual will be supplied

Information how to setup this X/Y rotor system can be found in the SPID Manual, it is recommended to download this document from our /HR support page once you start installation.

Setup MD-02 and PS-02 picture below. (PS-02 is optional)

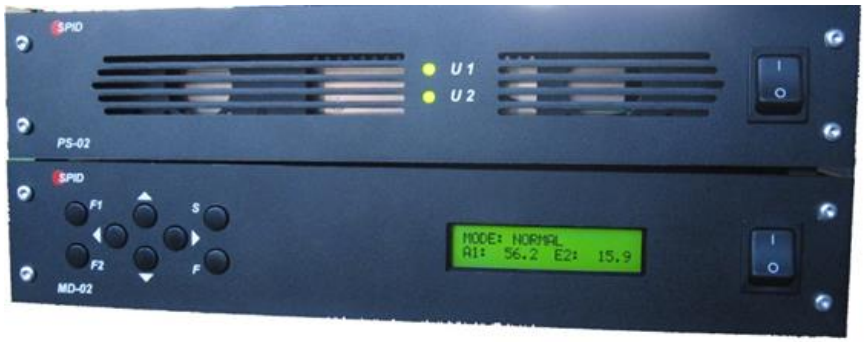

Short summary MD-0x controller

Build in MD-0x rotor controller is a track interface which will be connected through USB (Win XP….Win 7, 8, 10, 11)
USB Driver not needed, WIN OS support SPID products.
New functions are available now and can be configured by the user through MD01dde.exe PC interface:

MD-0x (UI) Interface (Picture right) can be used to control the AZ & EL rotor by Personal Computer.
You can install your favourite track program and control MD-0x through USB without the MD01dde PC interface as well. (PST rotor is most used)

More available functions MD-01 / MD-02

- ✓ Most used and special function is the integrated function: Soft Start and Soft Stop ! Soft start and stop has available a 3 step Delay time and a 3 step acceleration time. Both Delay and acceleration can be set by the user step by step. This function is very helpful for large dishes
- ✓ Firmware update free of charge
- ✓ Short way function for Satellite track
- ✓ USB controlled
- ✓ Minimum and maximum angle free adjustable for Y and X Axe
- ✓ Write your own protocol and/or PC application (protocol available for download)
- ✓ Ethernet module option (optional unit)
- ✓ Current measure module option, actual current in Amp's of both motors (optional unit)
- ✓ Free of charge software update available at our High Resolution support page (need password to access)
- ✓ Lot of track software is supported: for example Orbitron (quit old) and PST rotor and much more.
  (Track software should support SPID or Rot2Prog protocol)

SPX-05/XY optional accessoires

SPX-05/XY Accessoires	P/N Refer Pricelist	Model
Motor Control Cable 4-core (4x1,5mm2) Reel: 25, 50, 75, 100 meter length **for SPX-05/XY/HR and SPX-05/XY/ABS**	**CC4-001/25**	
Positions Control Sensor cable, Screened 6-core 6x0,25sq.mm Reel: 25, 50, 75, 100 meter length **for SPX-05/XY/HR**	**CC6-/004/25**	
Positions sensor Absolute Encoder control cable 3x2x0.22mm2 shielded **CANbus** cable Reel: 25, 50, 75, 100 meter length **For SPX-05/XY/ABS**	**CC6-CAN/25**	
Power Supply PS-01 AC 110-240Volt Dual Voltage DC Output for use with SPX-05 (19"Rack mount Power supply)	**PS-01**	
Power Supply PS-02 AC 110-240Volt Dual Voltage DC Output for use with SPX-05 (Desktop Power supply)	**PS-02**	
Ethernet Module TCP/IP for MD-01 and MD-02 Control rotor system through internet (Remote control)	**SPID-ET**	
SPID-CCM CURRENT CONTROL MODULE measurement module to measure Amp's during use direct in MD-0x controllers. (Perfect to find out rotor balance)	**SPID-CCM**	
CWA-01 Counterweight arm, can be mount to bracket **SPX-05 XY** CWA-01 is supplied incl all mounting accessories Weight CWA-01: 3Kg CWA-01 is supplied without counter weight (dumbbell weights can be usued)	**CWA-01**	
PLATE-08/106 Pedestal to mount **SPX-05 and SPX-06** rotor to a mast pole. Max mast mounting diameter 106mm (4.13") Weight STR-08/106: 13Kg	**PLATE-08/106**	
PLATE-08/68/STR Pedestal to mount S**PX-05** rotor to **STR-03** Weight STR-08/68/STR: 6Kg	**PLATE-08/68/STR**	
PLATE-08/68 Pedestal to mount **SPX-05 XY and SPX-06** rotor to a mast pole. Max mast mounting diameter 68mm (2.68") Weight STR-08/68: 8Kg	**PLATE-08/68**	

Note: Actual Prices can be found in our price list, download link at our web-site: www.rfhamdesign.com

Optional Power supply:
SPID Power Supply Module, PS-01 & PS-02

Model: SPID PS-01

Model: SPID PS-02

This Module, PS-0X is a Dual Voltage PSU which should be connected to MD-0X High Resolution rotor system SPX-05/XY/HR or SPX-05/XY/ABS

Standard build in is an professional 150W/10A and a 500W/20A Power Supply unit.
The Power supply units PS-01 / PS-02 do have the same dimensions as MD-01 / MD-02 Controllers.

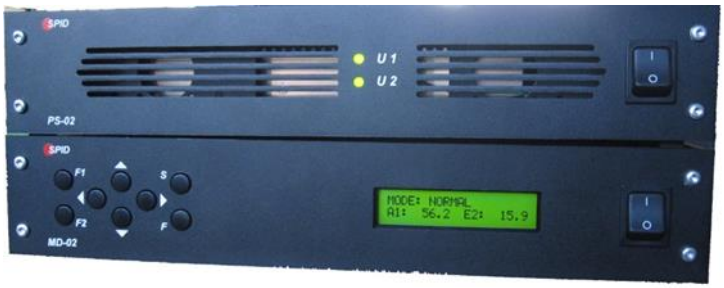

Model: SPID PS-02 and MD-02

Specifications: SPID PS-01 / PS-02 power supply		
Model:	**PS-01 (19" Rack mount)**	**PS-02 (Desktop model)**
AC input	50/60Hz – 100-240VAC	50/60Hz – 100-240VAC
Dimensions	(483x366x45mm)	(386x306x70mm)
Weight lbs / Mass Kg	6 Kg	6 Kg
Environment	Ground / Mobile free air and / or Sheltered	Ground / Mobile free air and / or Sheltered
MTBF	32000 hours @ -20 to +55°C	32000 hours @ -20 to +55°C
Supplied with:	Connectors and mains cable	Connectors and mains cable

Note: Actual Prices can be found in our price list, download link at our web-site: www.rfhamdesign.com

Antenna Mount plate SPX-05/ X Y
Dimensions in mm

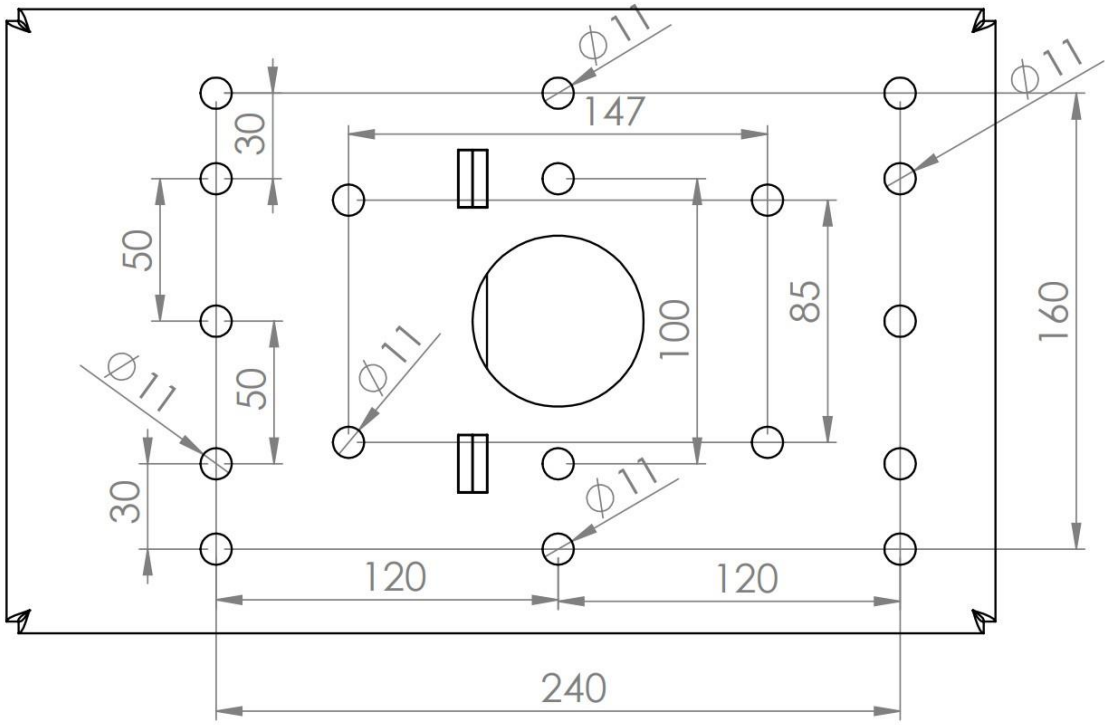

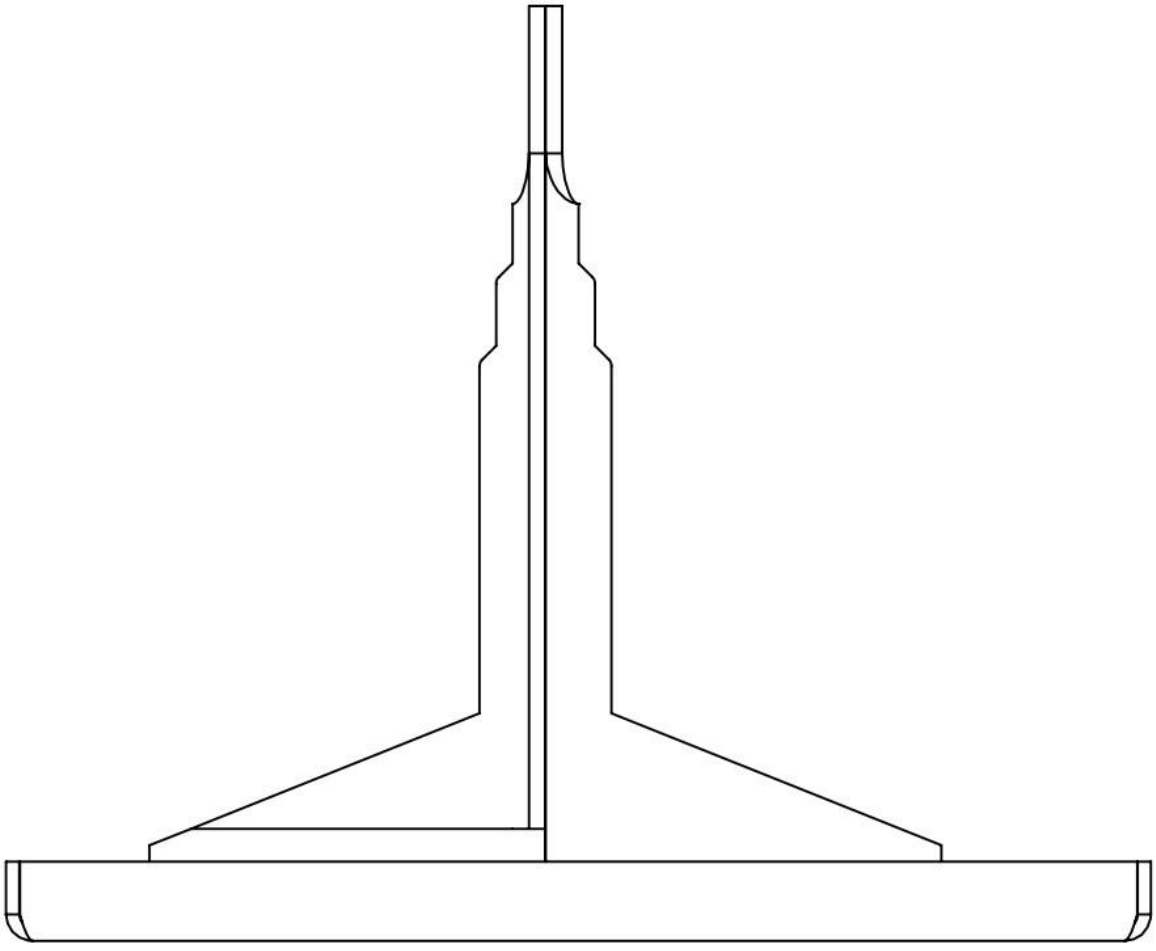

Bottom baseplate SPX-05 X Y
Dimensions in mm

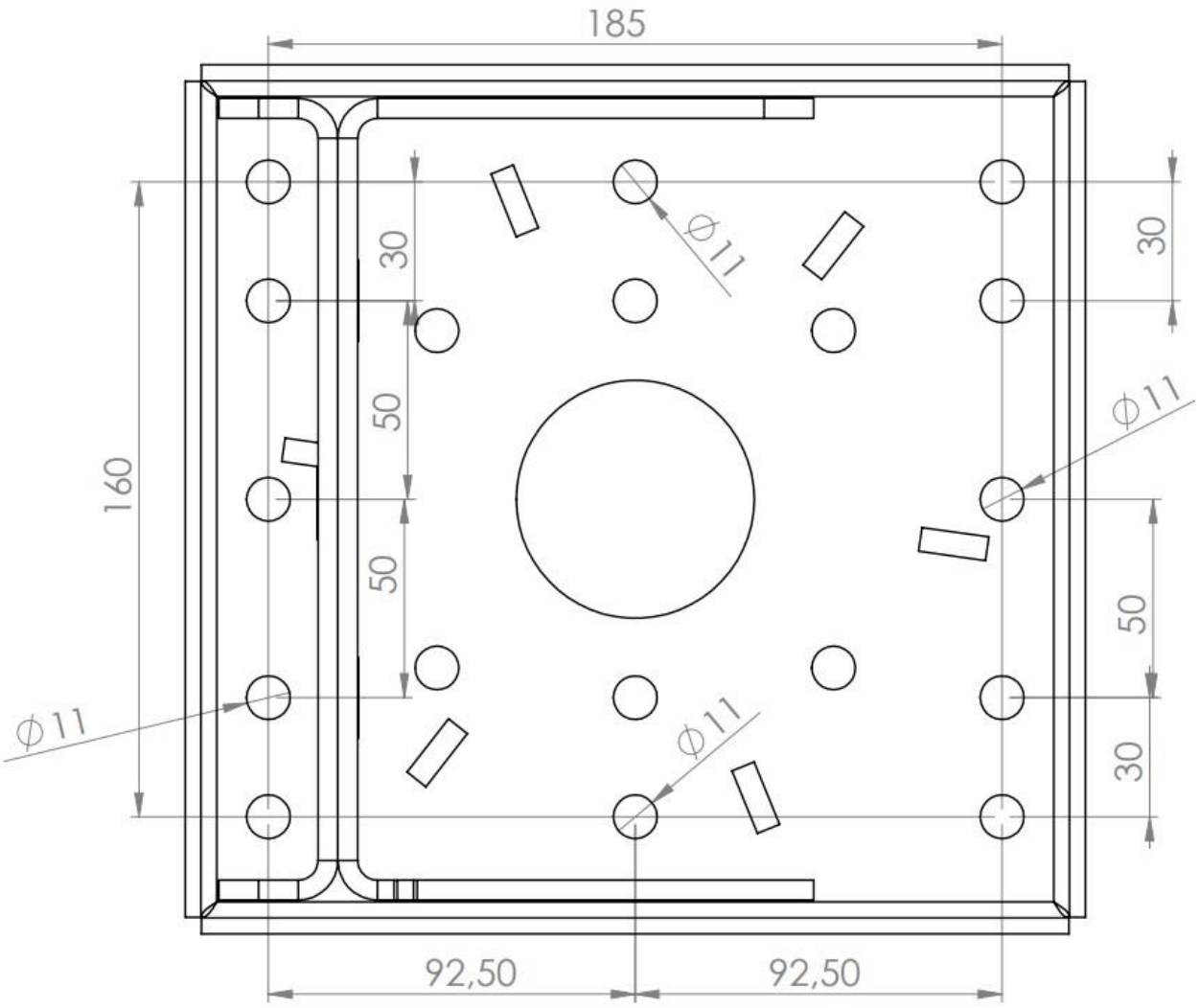

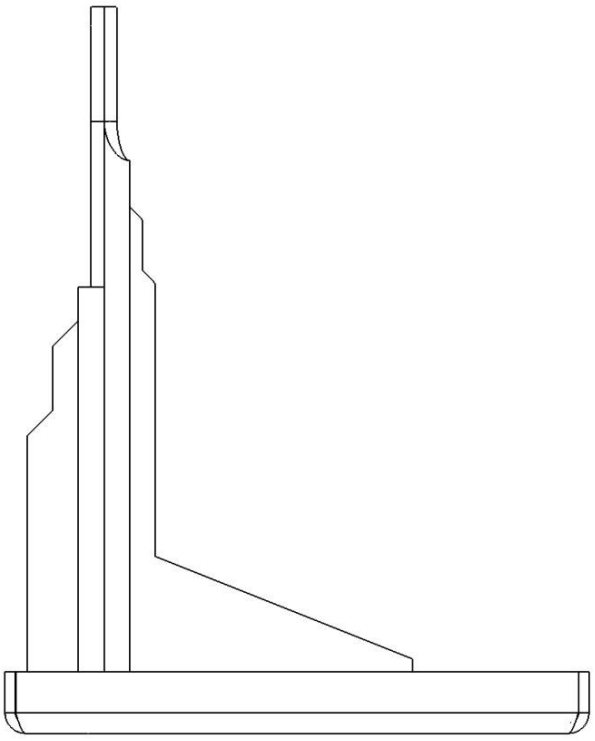

PLATE-08/68
Dimensions in mm

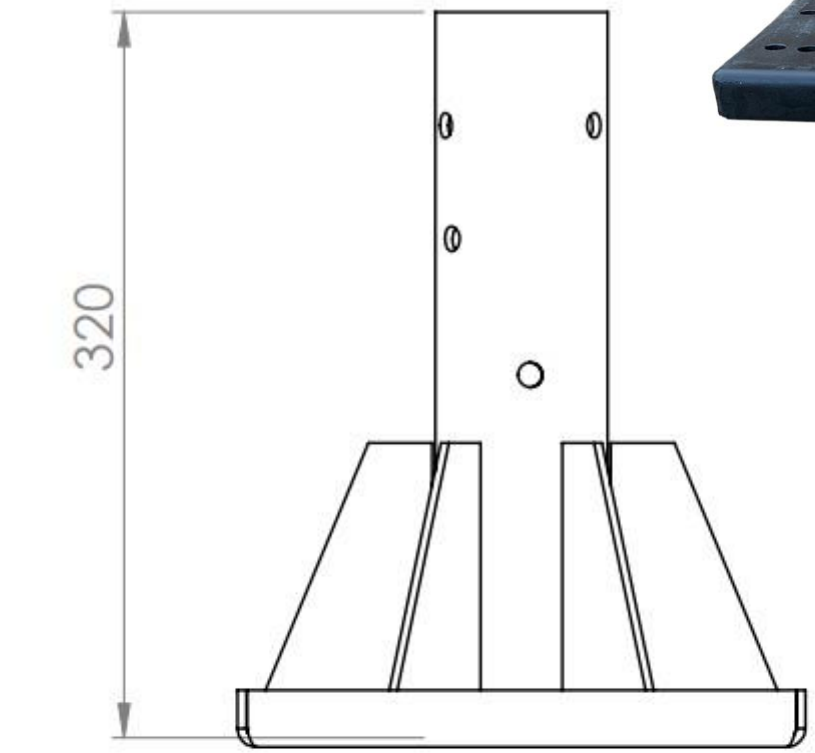

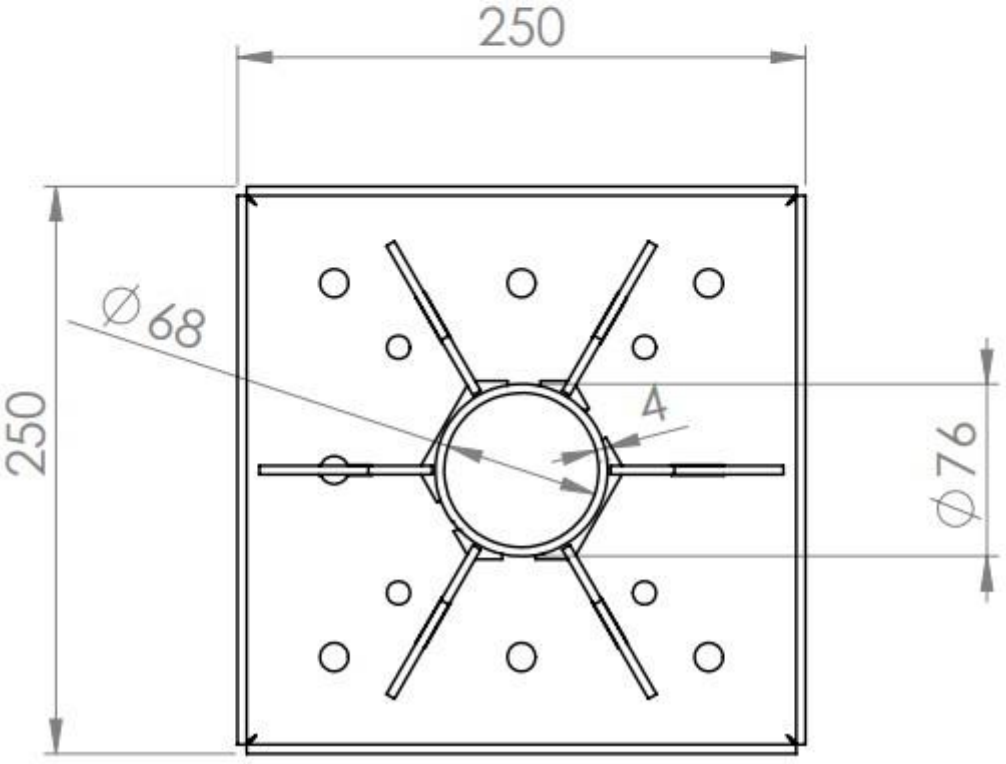

PLATE-08/106
Dimensions in mm

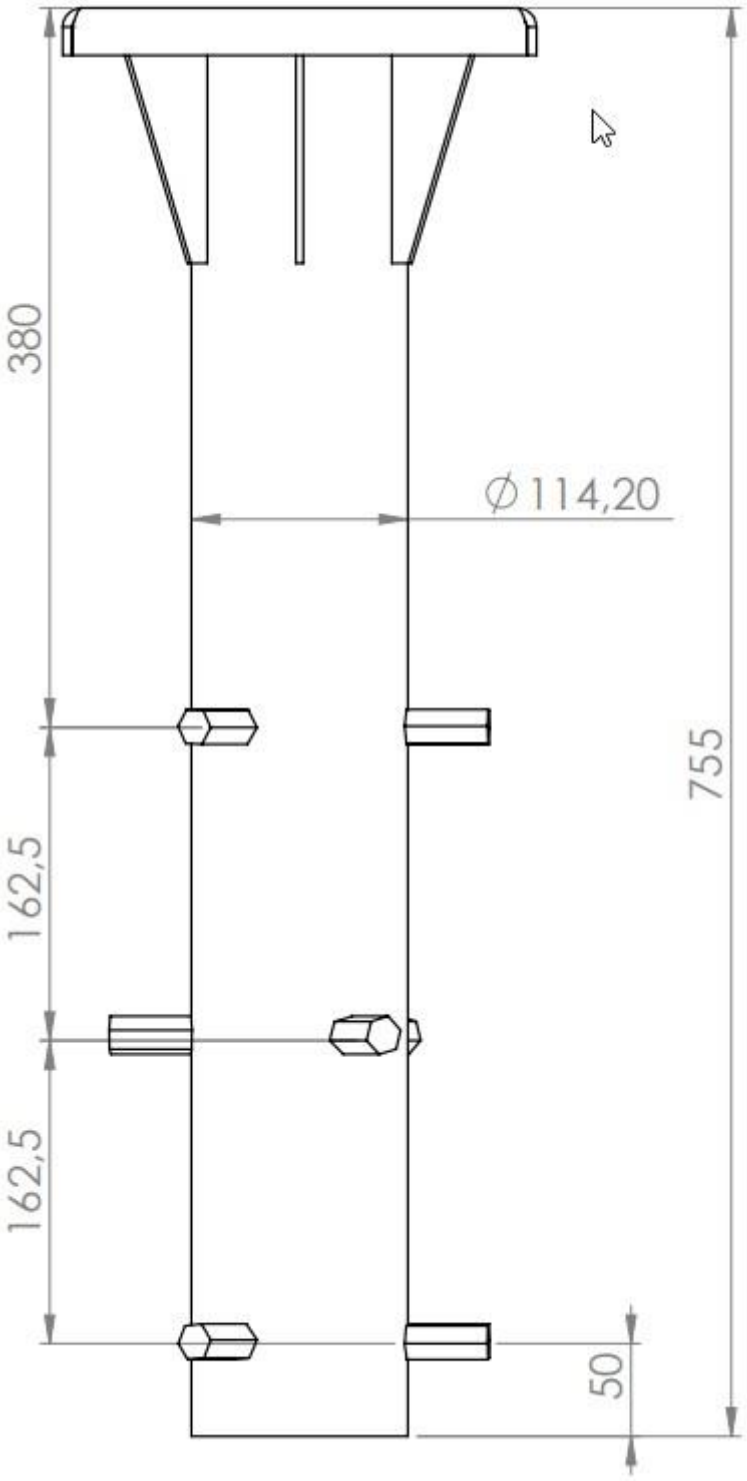

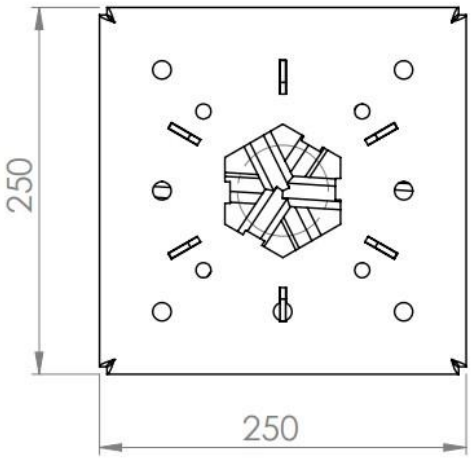

PLATE-08/68/STR
Dimensions in mm

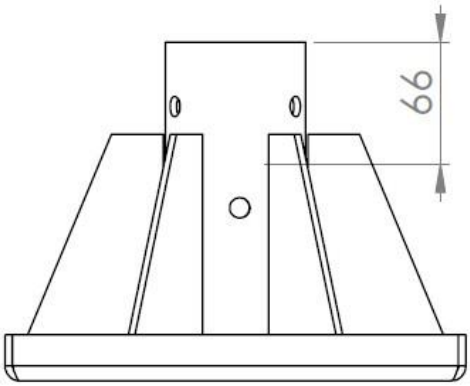

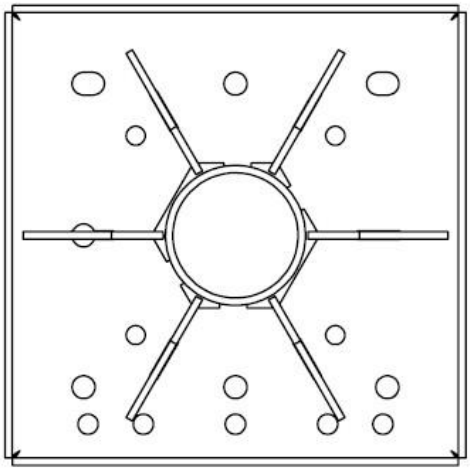

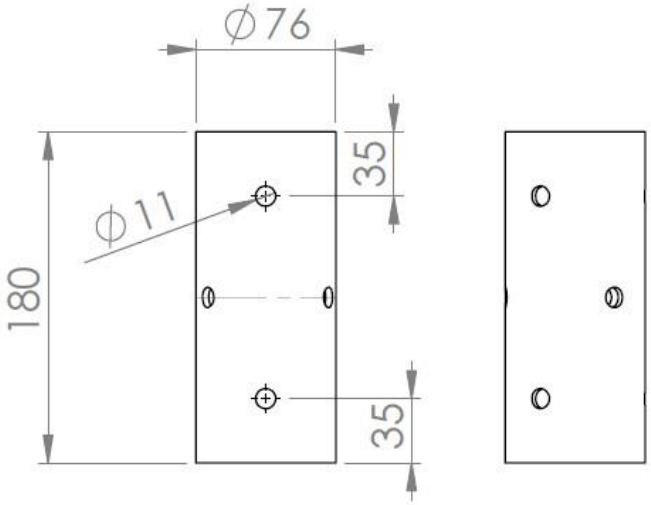
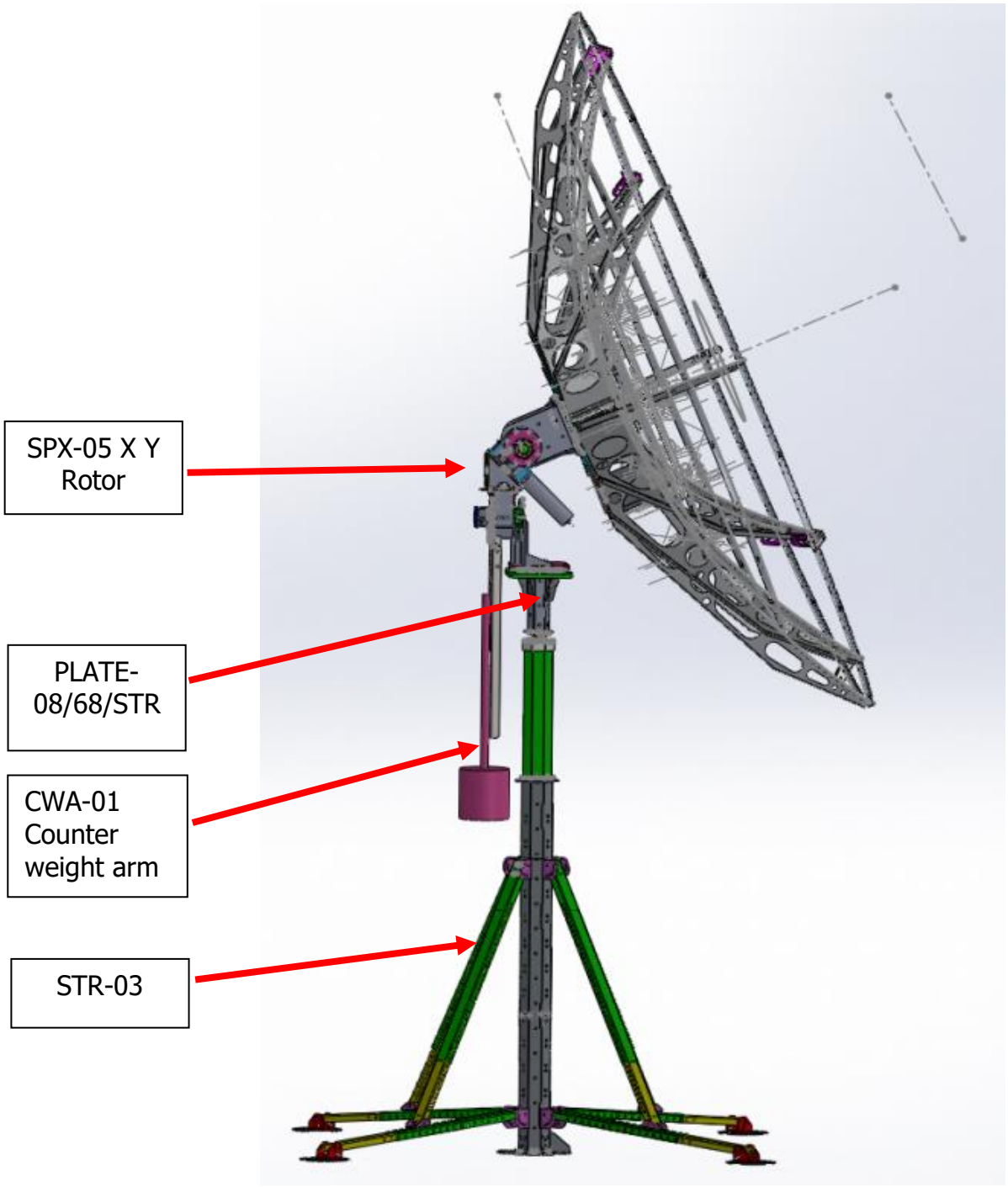
SPX-05 X Y Rotor system including:
STR-03 (Four Legged Frame), PLATE-08/68/STR, 3 Meter Mesh Dish and CWA-01