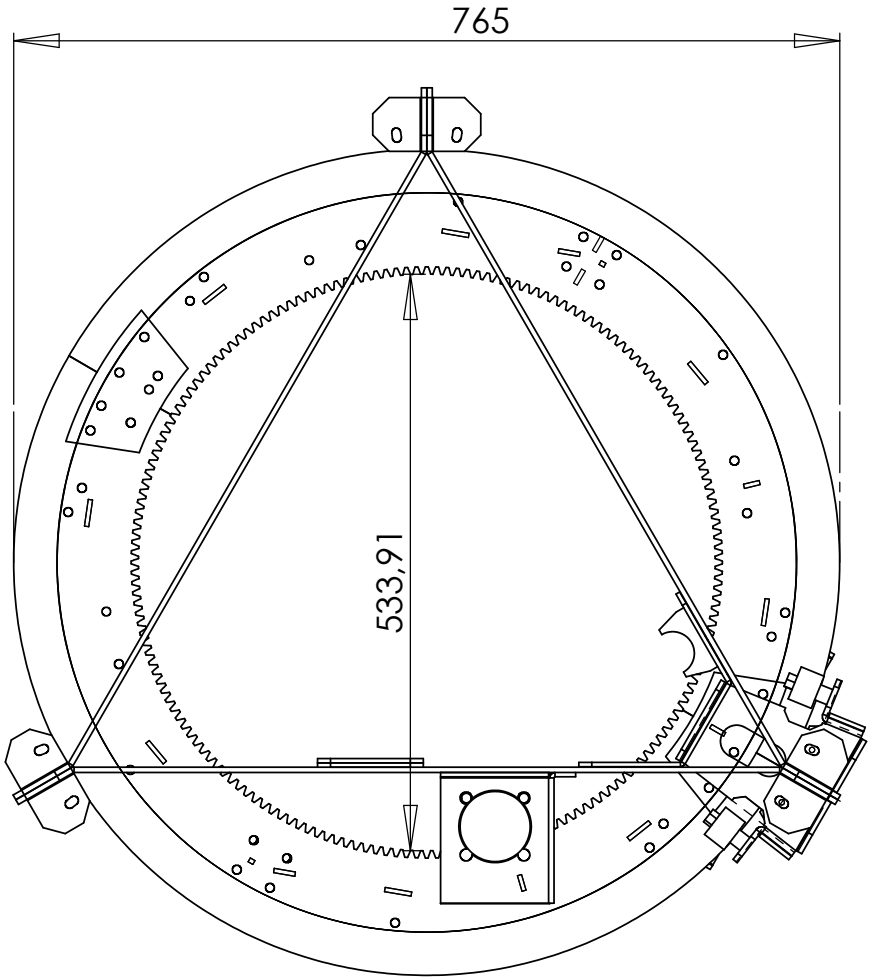


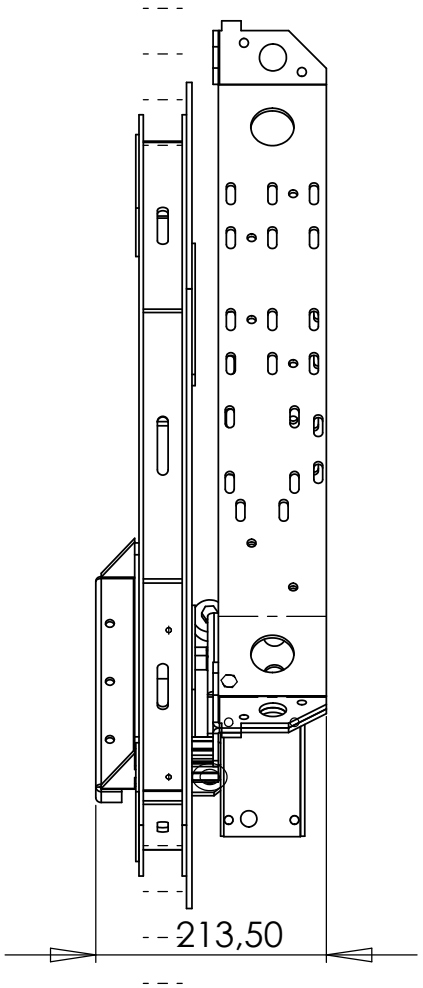


| | | | | | |
|---|---|---|---|---|---|
| | | UNLESS OTHERWISE SPECIFIED: | | NAME | DATE |
| | | DIMENSIONS ARE IN INCHES<br>TOLERANCES:<br>FRACTIONAL ±<br>ANGULAR: MACH ± BEND ±<br>TWO PLACE DECIMAL ±<br>THREE PLACE DECIMAL ± | DRAWN | | |
| | | | CHECKED | | |
| | | | ENG APPR. | | |
| | | | MFG APPR. | | |
| | | INTERPRET GEOMETRIC TOLERANCING PER: | Q.A. | | |
| | | MATERIAL | COMMENTS: | | |
| NEXT ASSY | USED ON | FINISH | | | |
| APPLICATION | | DO NOT SCALE DRAWING | | | |

TITLE:

SIZE | DWG. NO. | REV

Podstawa kpl.

SCALE: 1:20 | WEIGHT: | SHEET 1 OF 1

**PROPRIETARY AND CONFIDENTIAL**

THE INFORMATION CONTAINED IN THIS DRAWING IS THE SOLE PROPERTY OF <INSERT COMPANY NAME HERE>. ANY REPRODUCTION IN PART OR AS A WHOLE WITHOUT THE WRITTEN PERMISSION OF <INSERT COMPANY NAME HERE> IS PROHIBITED.

5 4 3 2 1